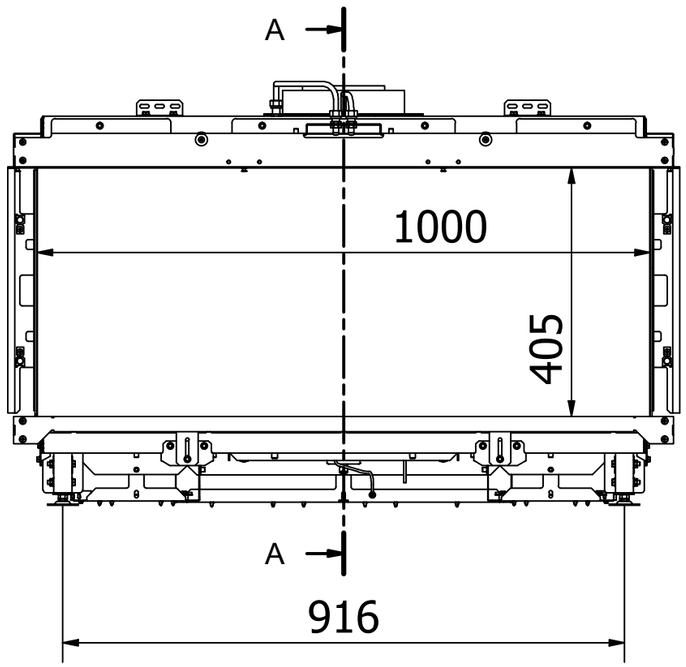

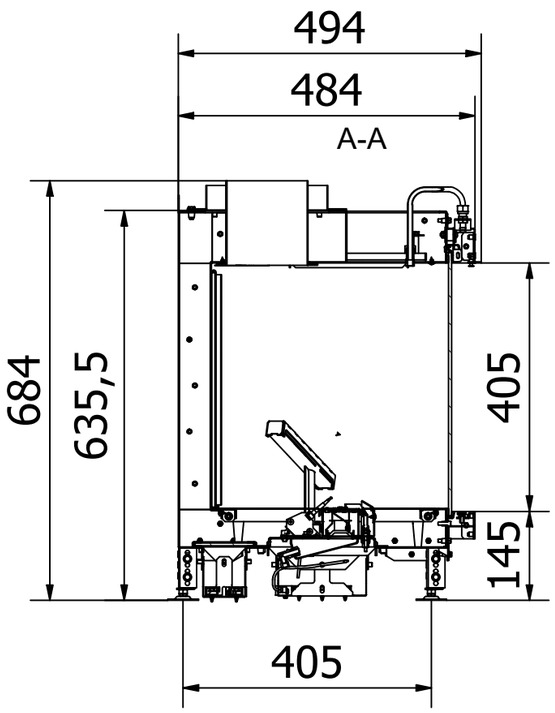

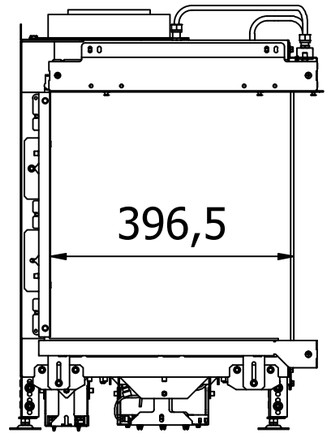

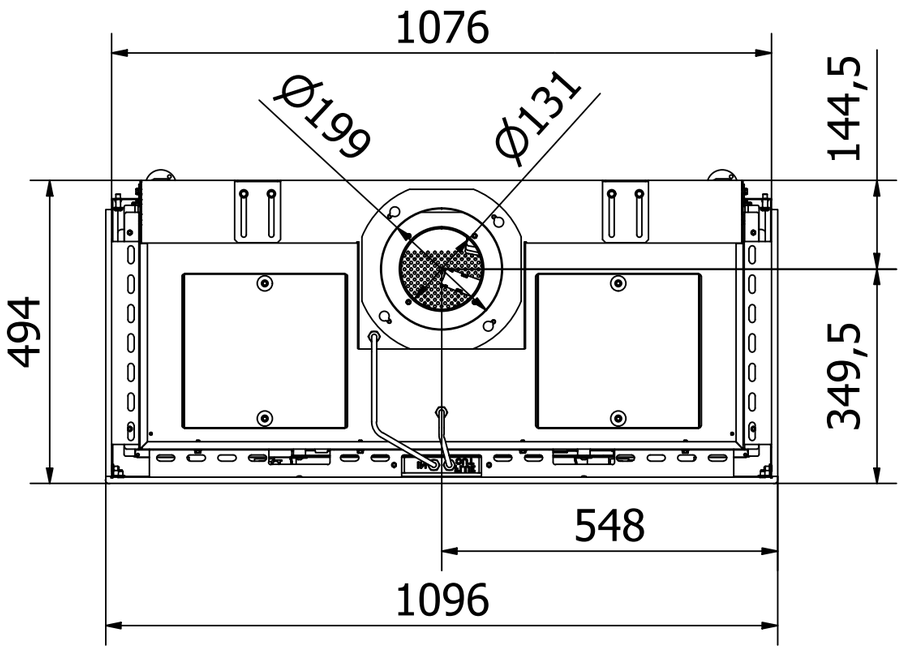

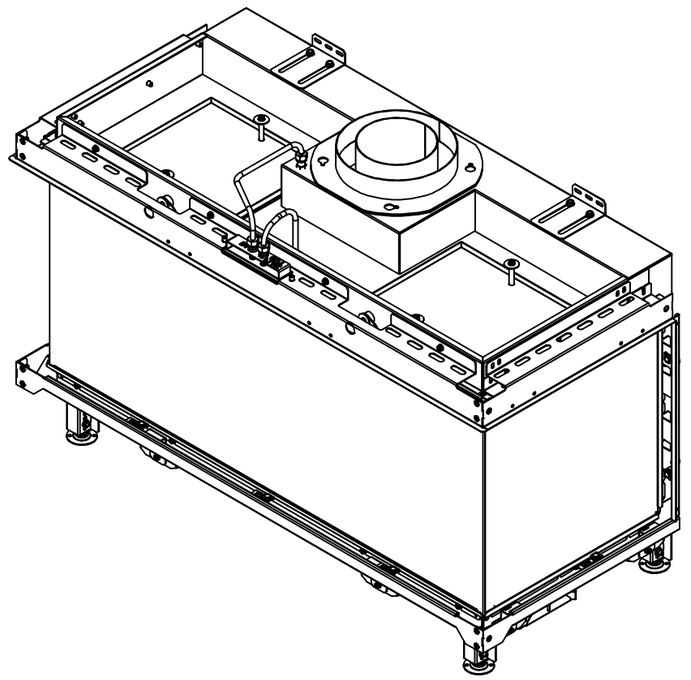

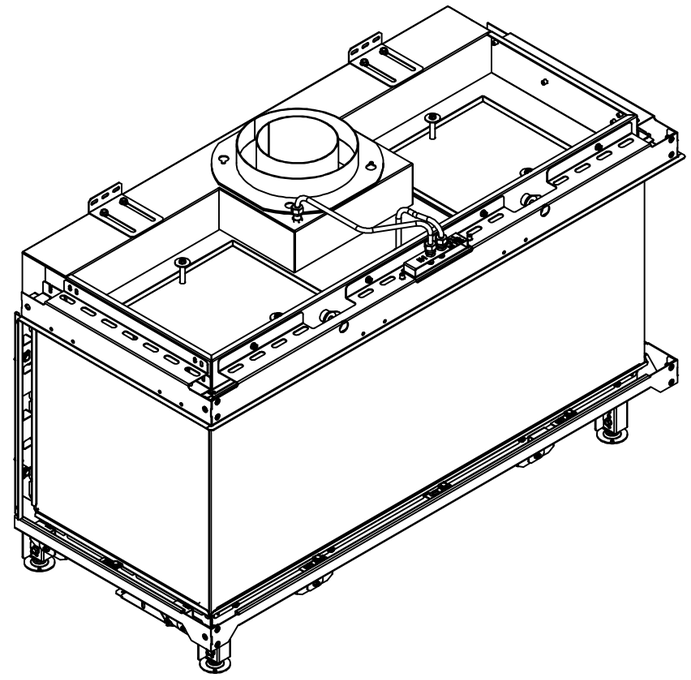

RAIS Visio Gas 100-43-39 3S-6543